Differential Amplifier Frequency Response

October 30, 2017 4:00 PM

Small Signal Model for the D.A.:

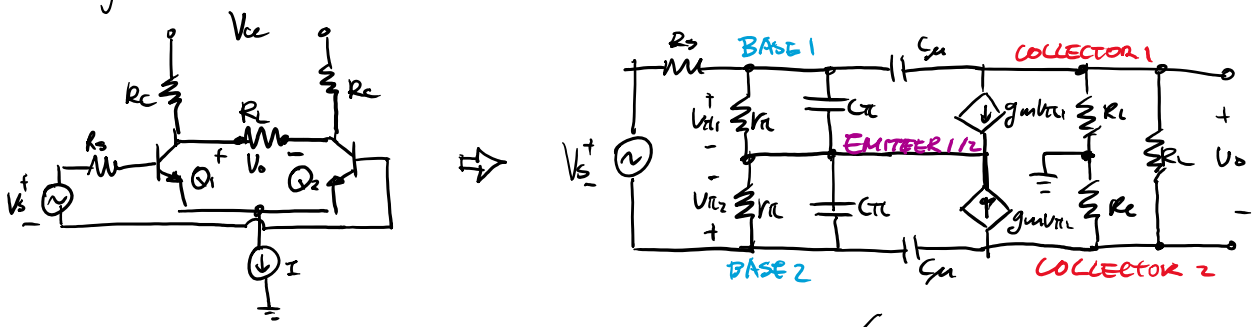

Miller gain: $K = \frac{V_o}{2V_\pi} = -g_m R_c \left(\frac{R_L}{R_L+2R_c}\right)$

So using miller to separate the capacitors, we get

$C_{\mu 1} = C_\mu \cdot \frac{1}{2}(1-K)$

$C_{\mu 2} = C_\mu \cdot \frac{1}{2}\left(1-\frac{1}{K}\right)$

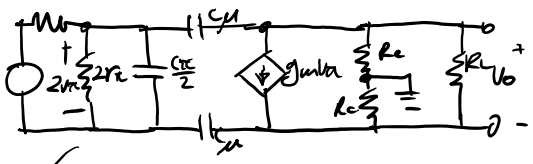

Miller

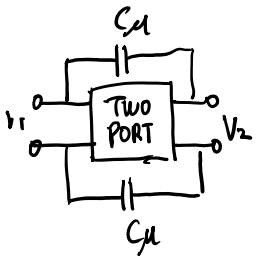

$Z_1 = \frac{1}{\frac{sC_\mu(1-K)}{2}} \rightarrow C_{\mu 1} = \frac{C_\mu}{2}(1-K)$

$Z_2 = \frac{1}{\frac{sC_\mu}{2}\left(1-\frac{1}{K}\right)} \rightarrow C_{\mu 2} = \frac{C_\mu}{2}\left(1-\frac{1}{K}\right)$

This becomes very similar to the <u>Common Emitter</u> amplifier except there is a factor of 2 to watch out for.

At Midband: $V_o = -g_m V_\pi \cdot 2R_c \cdot \frac{R_L}{R_L+2R_c}$, $2V_\pi = V_s \cdot \frac{2r_\pi}{2r_\pi + R_s}$

$\rightarrow V_o = -g_m V_s \cdot \frac{2r_\pi}{2r_\pi + R_s} R_c \frac{R_L}{R_L+2R_c}$

$$\boxed{A_m = \frac{V_o}{V_s} = -g_m R_c \left(\frac{2r_\pi}{2r_\pi+R_s}\right)\left(\frac{R_L}{R_L+2R_c}\right)}$$

At High frequency:

$$\boxed{\begin{aligned} \omega_{HP1} &= \left[\left(\frac{C_\pi}{2} + \frac{C_\mu}{2}(1-K)\right)\cdot\left(R_s \,//\, 2r_\pi\right)\right]^{-1} \\ \omega_{HP2} &= \left[\frac{C_\mu}{2}\left(1-\frac{1}{K}\right)\cdot\left(2R_c \,//\, R_L\right)\right]^{-1} \end{aligned}}$$

$$\boxed{\omega_{HP2} = \left[\frac{C_\mu}{2}(1-K_K)\cdot(2R_C \,//\, R_L)\right]^{-1}}$$

Since there are no coupling capacitors, low frequency is no interest for us.